Low-Noise, Very Low Drift, Precision VOLTAGE REFERENCE

FEATURES

- **LOW TEMPERATURE DRIFT:**
  - **High-Grade: 3ppm/°C (max)**
  - **Standard-Grade: 8ppm/°C (max)**
- **HIGH ACCURACY:**
  - **High-Grade: 0.05% (max)**
  - **Standard-Grade: 0.1% (max)**
- **LOW NOISE: 3μV_{PP}/V**
- **HIGH OUTPUT CURRENT: ±10mA**
- **TEMPERATURE RANGE: –40°C to +125°C**

APPLICATIONS

- **16-BIT DATA ACQUISITION SYSTEMS**
- **ATE EQUIPMENT**
- **INDUSTRIAL PROCESS CONTROL**
- **MEDICAL INSTRUMENTATION**
- **OPTICAL CONTROL SYSTEMS**
- **PRECISION INSTRUMENTATION**

DESCRIPTION

The REF50xx is a family of low-noise, low-drift, very high precision voltage references. These references are capable of both sinking and sourcing, and are very robust with regard to line and load changes.

Excellent temperature drift (3ppm/°C) and high accuracy (0.05%) are achieved using proprietary design techniques. These features, combined with very-low noise make the REF50xx family ideal for use in high-precision data acquisition systems.

Each reference voltage is available in both standard- and high-grade versions. They are offered in MSOP-8 (available Q3, 2007) and SO-8 packages, and are specified from –40°C to +125°C.

REF50xx Family

MODEL	OUTPUT VOLTAGE
REF5020	2.048V
REF5025	2.5V
REF5030	3.0V
REF5040	4.096V
REF5045	4.5V
REF5050	5.0V

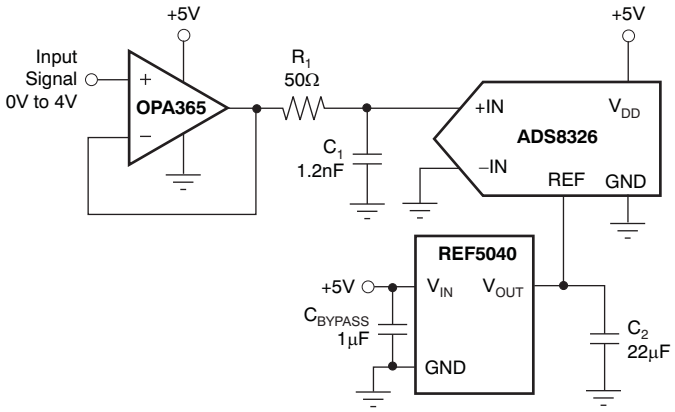

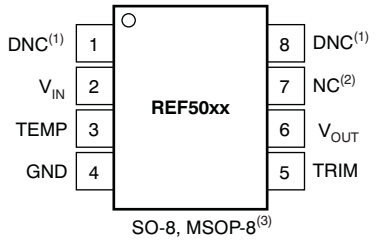

NOTES: (1) DNC = Do not connect.
(2) NC = No internal connection.
(3) MSOP-8 package available Q3, 2007.

Please be aware that an important notice concerning availability, standard warranty, and use in critical applications of Texas Instruments semiconductor products and disclaimers thereto appears at the end of this data sheet.

All trademarks are the property of their respective owners.

PRODUCTION DATA information is current as of publication date. Products conform to specifications per the terms of the Texas Instruments standard warranty. Production processing does not necessarily include testing of all parameters.

Copyright © 2007, Texas Instruments Incorporated

This integrated circuit can be damaged by ESD. Texas Instruments recommends that all integrated circuits be handled with appropriate precautions. Failure to observe proper handling and installation procedures can cause damage.

ESD damage can range from subtle performance degradation to complete device failure. Precision integrated circuits may be more susceptible to damage because very small parametric changes could cause the device not to meet its published specifications.

PACKAGE/ORDERING INFORMATION(1)

PRODUCT	OUTPUT VOLTAGE	PACKAGE-LEAD	PACKAGE DESIGNATOR	PACKAGE MARKING
STANDARD GRADE (8ppm, 0.1%)				
REF5020A	2.048V	SO-8	D	REF5020
		MSOP-8(2)	DGK	R50A
REF5025A	2.5V	SO-8	D	REF5025
		MSOP-8(2)	DGK	R50B
REF5030A	3.0V	SO-8	D	REF5030
		MSOP-8(2)	DGK	R50C
REF5040A	4.096V	SO-8	D	REF5040
		MSOP-8(2)	DGK	R50D
REF5045A	4.5V	SO-8	D	REF5045
		MSOP-8(2)	DGK	R50E
REF5050A	5.0V	SO-8	D	REF5050
		MSOP-8(2)	DGK	R50F
HIGH GRADE (3ppm, 0.05%)				
REF5020I	2.048V	SO-8	D	REF5020
		MSOP-8(2)	DGK	R50A
REF5025I	2.5V	SO-8	D	REF5025
		MSOP-8(2)	DGK	R50B
REF5030I	3.0V	SO-8	D	REF5030
		MSOP-8(2)	DGK	R50C
REF5040I	4.096V	SO-8	D	REF5040
		MSOP-8(2)	DGK	R50D
REF5045I	4.5V	SO-8	D	REF5045
		MSOP-8(2)	DGK	R50E
REF5050I	5.0V	SO-8	D	REF5050
		MSOP-8(2)	DGK	R50F

(1) For the most current package and ordering information see the Package Option Addendum at the end of this document, or see the TI web site at www.ti.com.
(2) MSOP-8 (DGK) package available Q3, 2007.

ABSOLUTE MAXIMUM RATINGS(1)

PARAMETER		REF50xx	UNIT
Input Voltage		+18	V
Output Short-Circuit		30	mA
Operating Temperature Range		–55 to +125	°C
Storage Temperature Range		–55 to +150	°C
Junction Temperature (T_J max)		+150	°C
ESD Rating	Human Body Model (HBM)	3000	V
	Charged Device Model (CDM)	1000	V

(1) Stresses above these ratings may cause permanent damage. Exposure to absolute maximum conditions for extended periods may degrade device reliability. These are stress ratings only, and functional operation of the device at these or any other conditions beyond those specified is not implied.

Copyright © 2007, Texas Instruments Incorporated

ELECTRICAL CHARACTERISTICS: PER DEVICE

Boldface limits apply over the specified temperature range, **T_A = –40°C to +125°C.**
At T_A = +25°C, I_{LOAD} = 0, C_L = 1µF, and V_{IN} = (V_{OUT} + 0.2V) to 18V, unless otherwise noted.

PARAMETER	CONDITIONS	PER DEVICE MIN	PER DEVICE TYP	PER DEVICE MAX	UNIT
REF5020 (V_{OUT} = 2.048V)(1)					
OUTPUT VOLTAGE					
Output Voltage V_{OUT}	2.7V < V_{IN} < 18V		2.048		V
Initial Accuracy: High-Grade		–0.05		0.05	%
Standard-Grade		–0.1		0.1	%
NOISE					
Output Voltage Noise	f = 0.1Hz to 10Hz		6		μV_{PP}
REF5025 (V_{OUT} = 2.5V)					
OUTPUT VOLTAGE					
Output Voltage V_{OUT}			2.5		V
Initial Accuracy: High-Grade		–0.05		0.05	%
Standard-Grade		–0.1		0.1	%
NOISE					
Output Voltage Noise	f = 0.1Hz to 10Hz		7.5		μV_{PP}
REF5030 (V_{OUT} = 3.0V)					
OUTPUT VOLTAGE					
Output Voltage V_{OUT}			3.0		V
Initial Accuracy: High-Grade		–0.05		0.05	%
Standard-Grade		–0.1		0.1	%
NOISE					
Output Voltage Noise	f = 0.1Hz to 10Hz		9		μV_{PP}
REF5040 (V_{OUT} = 4.096V)					
OUTPUT VOLTAGE					
Output Voltage V_{OUT}			4.096		V
Initial Accuracy: High-Grade		–0.05		0.05	%
Standard-Grade		–0.1		0.1	%
NOISE					
Output Voltage Noise	f = 0.1Hz to 10Hz		12		μV_{PP}
REF5045 (V_{OUT} = 4.5V)					
OUTPUT VOLTAGE					
Output Voltage V_{OUT}			4.5		V
Initial Accuracy: High-Grade		–0.05		0.05	%
Standard-Grade		–0.1		0.1	%
NOISE					
Output Voltage Noise	f = 0.1Hz to 10Hz		13.5		μV_{PP}
REF5050 (V_{OUT} = 5.0V)					
OUTPUT VOLTAGE					
Output Voltage V_{OUT}			5.0		V
Initial Accuracy: High-Grade		–0.05		0.05	%
Standard-Grade		–0.1		0.1	%
NOISE					
Output Voltage Noise	f = 0.1Hz to 10Hz		15		μV_{PP}

(1) For V_{OUT} ≤ 2.5V, the minimum supply voltage is 2.7V.

Copyright © 2007, Texas Instruments Incorporated

ELECTRICAL CHARACTERISTICS: ALL DEVICES

Boldface limits apply over the specified temperature range, **T_A = –40°C to +125°C.**
At T_A = +25°C, I_{LOAD} = 0, C_L = 1µF, and V_{IN} = (V_{OUT} + 0.2V) to 18V, unless otherwise noted.

PARAMETER		CONDITIONS	REF50xx MIN	REF50xx TYP	REF50xx MAX	UNIT
OUTPUT VOLTAGE TEMPERATURE DRIFT						
Output Voltage Temperature Drift	**dV_{OUT}/dT**					
High-Grade				**2.5**	**3**	**ppm/°C**
Standard-Grade				**3**	**8**	**ppm/°C**
LINE REGULATION						
Line Regulation	dV_{OUT}/dV_{IN}					
REF5020[(1)] Only		V_{IN} = 2.7V to 18V		0.1	1	ppm/V
All Other Devices				0.1	1	ppm/V
Over Temperature				**0.2**	**1**	**ppm/V**
LOAD REGULATION						
Load Regulation	dV_{OUT}/d_{ILOAD}	–10mA < I_{LOAD} < +10mA, V_{IN} = V_{OUT} + 0.75V		20	30	ppm/mA
Over Temperature					**50**	**ppm/mA**
SHORT-CIRCUIT CURRENT						
Short-Circuit Current	I_{SC}	V_{OUT} = 0		25		mA
TEMP PIN						
Voltage Output		At T_A = +25°C		575		mV
Temperature Sensitivity				**2.64**		**mV/°C**
TURN-ON SETTLING TIME						
Turn-On Settling Time		To 0.1% with C_L = 1µF		200		µs
POWER SUPPLY						
Supply Voltage	V_S	See Note [(1)]	V_{OUT} + 0.2[(1)]		18	V
Quiescent Current				0.8	1	mA
Over Temperature					**1.2**	**mA**
TEMPERATURE RANGE						
Specified Range			–40		+125	°C
Operating Range			–55		+125	°C
Thermal Resistance	θ_{JA}					
MSOP-8				150		°C/W
SO-8				150		°C/W

(1) For V_{OUT} ≤ 2.5V, the minimal supply voltage is 2.7V.

Copyright © 2007, Texas Instruments Incorporated

TYPICAL CHARACTERISTICS

At T_A = +25°C, I_{LOAD} = 0, and V_S = V_{OUT} + 0.2V, unless otherwise noted. For V_{OUT} ≤ 2.5V, the minimum supply voltage is 2.7V.

TEMPERATURE DRIFT (0°C to +85°C)

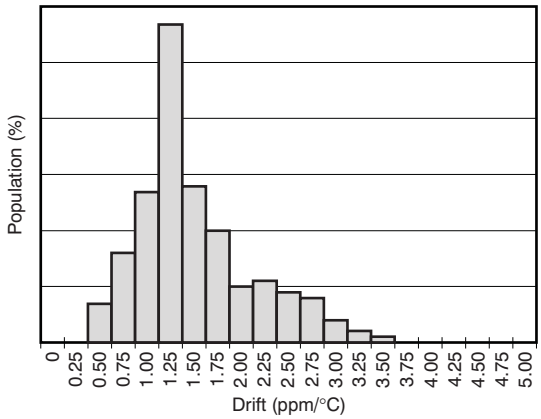

Figure 1.

TEMPERATURE DRIFT (–40°C to +125°C)

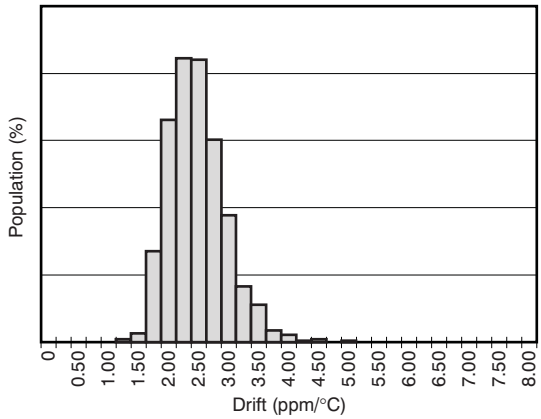

Figure 2.

OUTPUT VOLTAGE INITIAL ACCURACY

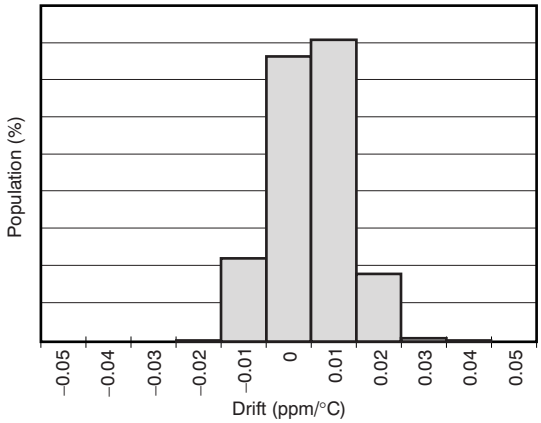

Figure 3.

OUTPUT VOLTAGE ACCURACY vs TEMPERATURE

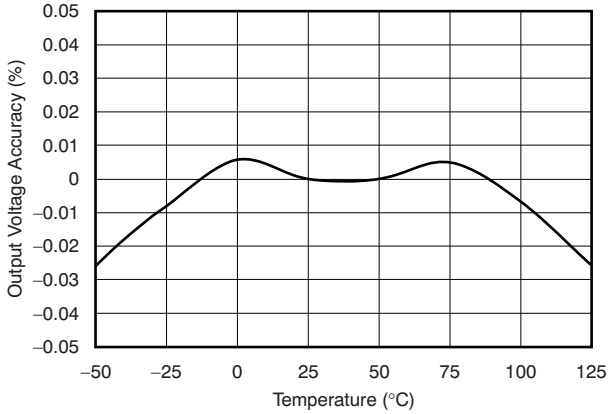

Figure 4.

POWER-SUPPLY REJECTION RATIO vs FREQUENCY

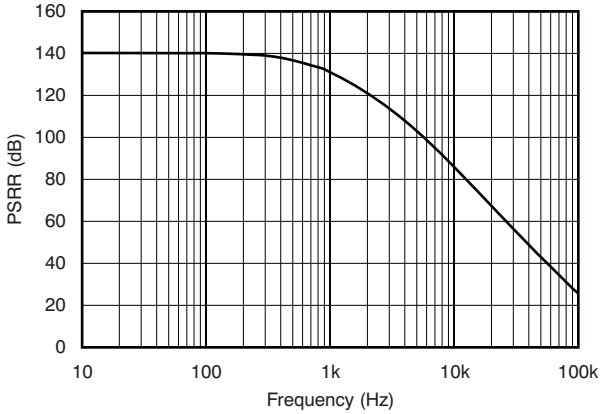

Figure 5.

DROPOUT VOLTAGE vs LOAD CURRENT

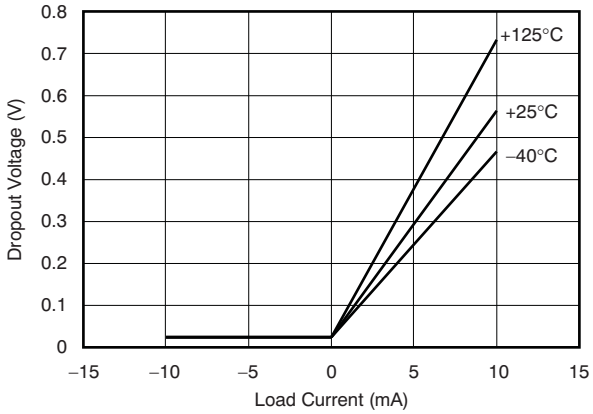

Figure 6.

Copyright © 2007, Texas Instruments Incorporated

TYPICAL CHARACTERISTICS (continued)

At T_A = +25°C, I_{LOAD} = 0, and V_S = V_{OUT} + 0.2V, unless otherwise noted. For V_{OUT} ≤ 2.5V, the minimum supply voltage is 2.7V.

REF5025 OUTPUT VOLTAGE vs LOAD CURRENT

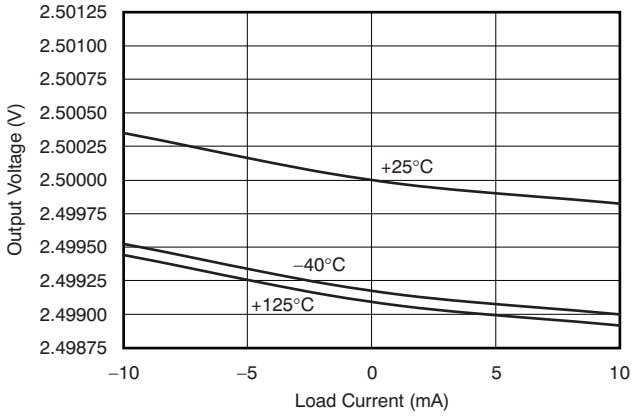

Figure 7.

TEMP PIN OUTPUT VOLTAGE vs TEMPERATURE

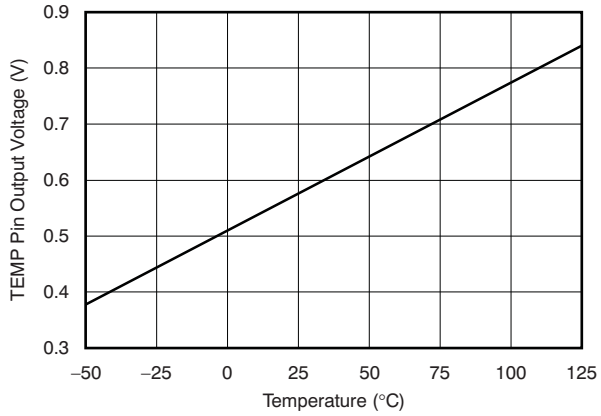

Figure 8.

QUIESCENT CURRENT vs TEMPERATURE

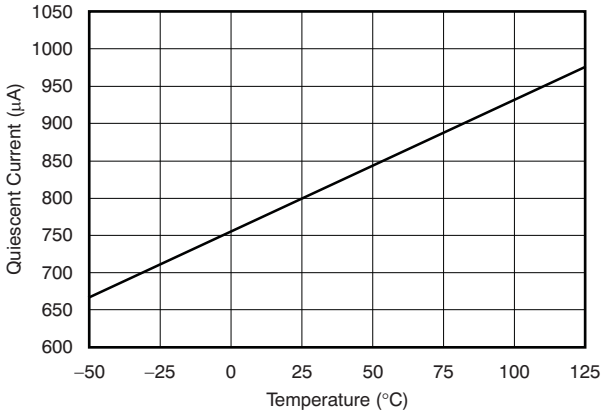

Figure 9.

LINE REGULATION vs TEMPERATURE

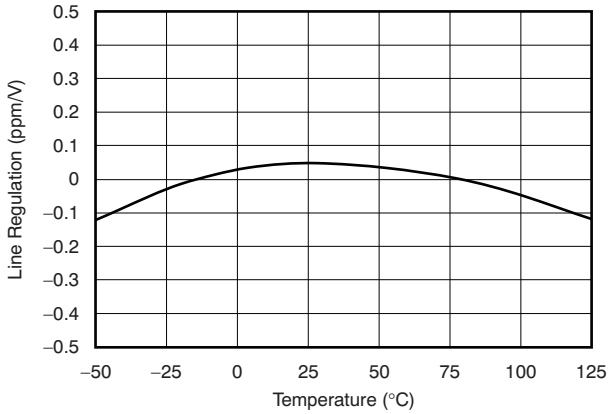

Figure 10.

SHORT-CIRCUIT CURRENT vs TEMPERATURE

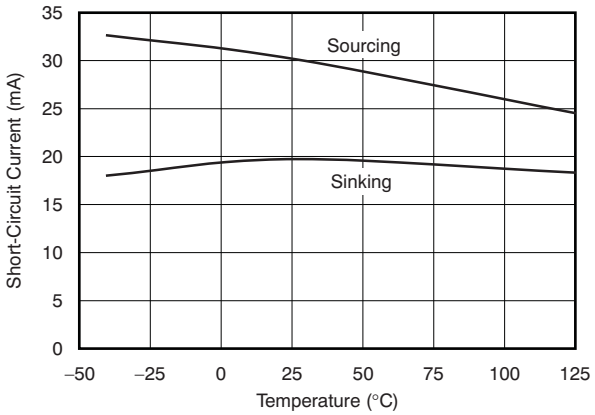

Figure 11.

NOISE

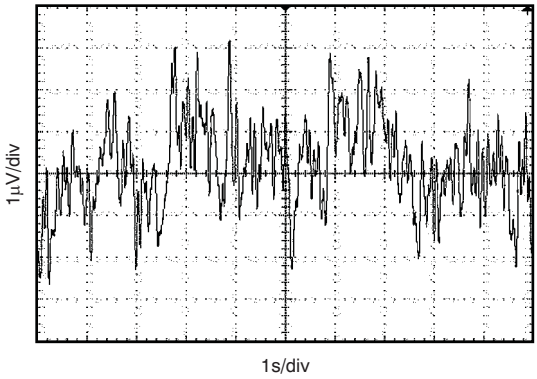

Figure 12.

Copyright © 2007, Texas Instruments Incorporated

TYPICAL CHARACTERISTICS (continued)

At T_A = +25°C, I_{LOAD} = 0, and V_S = V_{OUT} + 0.2V, unless otherwise noted. For V_{OUT} ≤ 2.5V, the minimum supply voltage is 2.7V.

STARTUP (REF5025, C_L = 1µF)

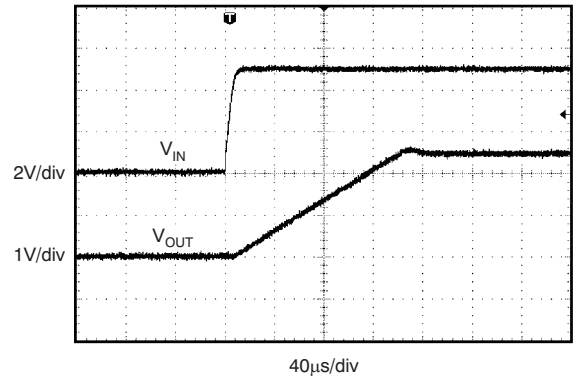

Figure 13.

STARTUP (REF5025, C_L = 10µF)

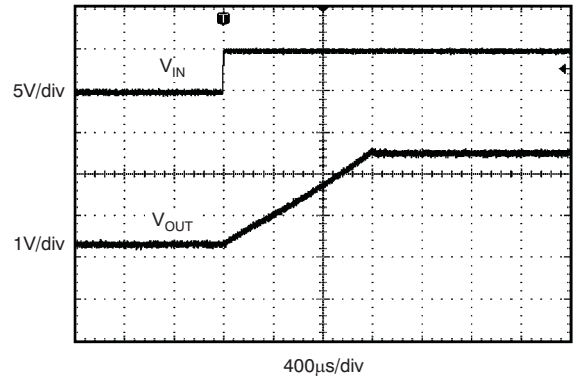

Figure 14.

LOAD TRANSIENT (C_L = 1µF, I_{OUT} = 1mA)

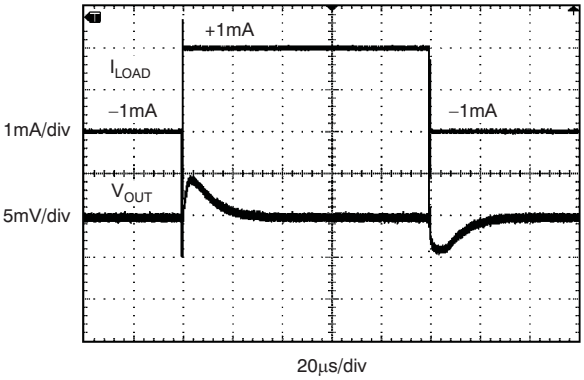

Figure 15.

LOAD TRANSIENT (C_L = 1µF, I_{OUT} = 10mA)

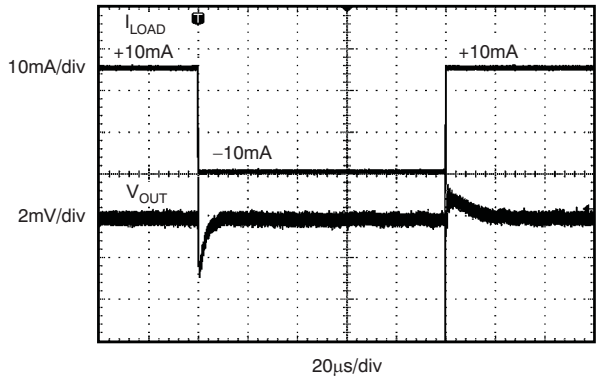

Figure 16.

LOAD TRANSIENT (C_L = 10µF, I_{OUT} = 1mA)

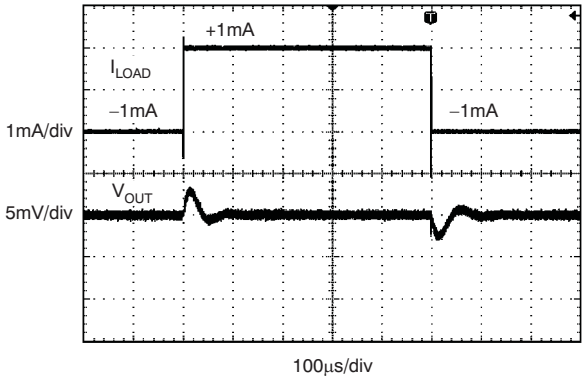

Figure 17.

LOAD TRANSIENT (C_L = 10µF, I_{OUT} = 10mA)

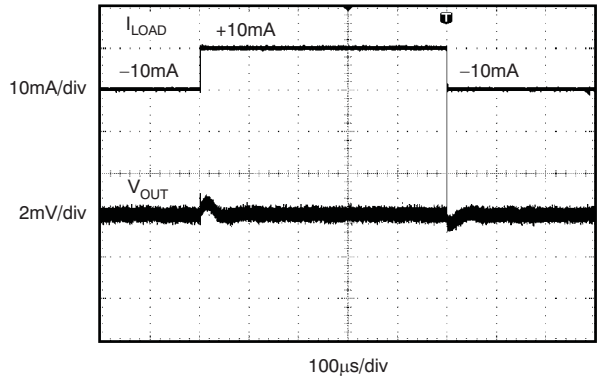

Figure 18.

Copyright © 2007, Texas Instruments Incorporated

TYPICAL CHARACTERISTICS (continued)

At T_A = +25°C, I_{LOAD} = 0, and V_S = V_{OUT} + 0.2V, unless otherwise noted. For V_{OUT} ≤ 2.5V, the minimum supply voltage is 2.7V.

LINE TRANSIENT (C_L = 1µF)

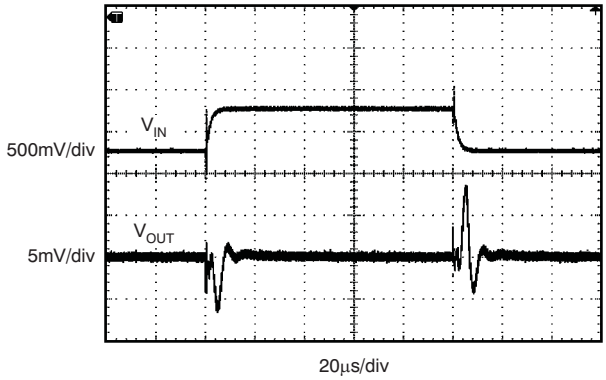

Figure 19.

LINE TRANSIENT (C_L = 10µF)

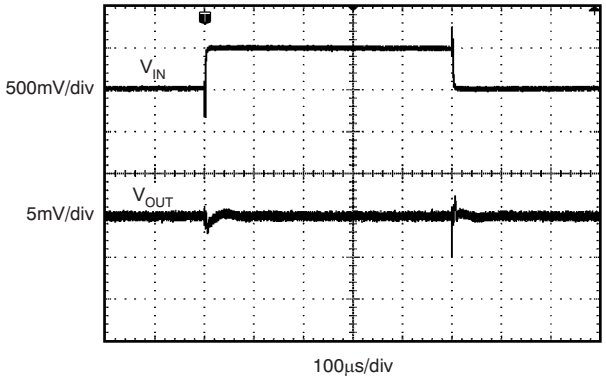

Figure 20.

Copyright © 2007, Texas Instruments Incorporated

APPLICATION INFORMATION

The REF50xx is family of low-noise, precision bandgap voltage references that are specifically designed for excellent initial voltage accuracy and drift. Figure 21 shows a simplified block diagram of the REF50xx.

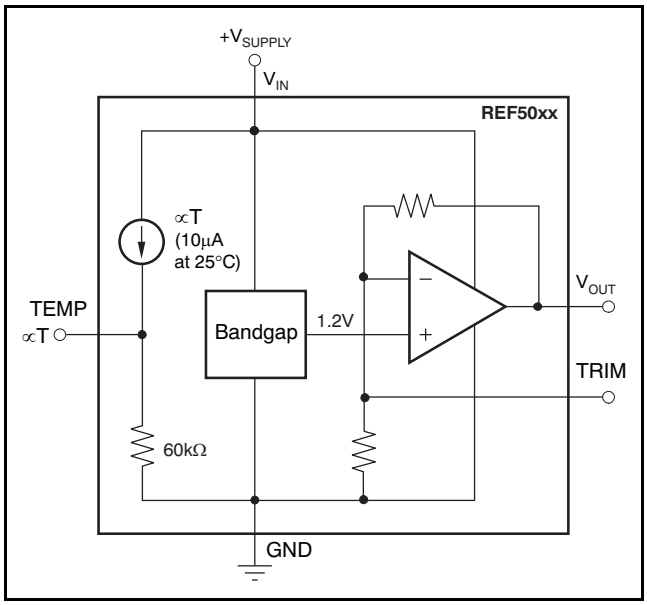

Figure 21. REF50xx Simplified Block Diagram

BASIC CONNECTIONS

Figure 22 shows the typical connections for the REF50xx. A supply bypass capacitor ranging between 1µF to 10µF is recommended. A 1µF to 50µF, low-ESR output capacitor (C_L) must be connected to V_{OUT}.

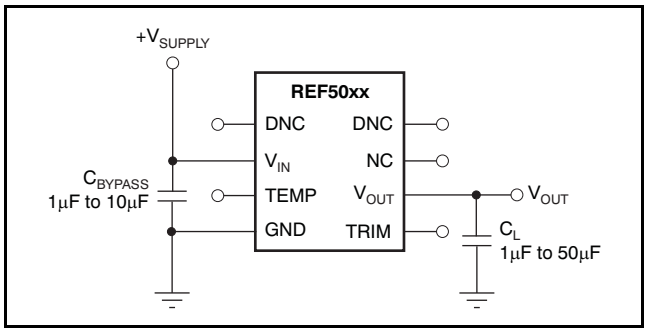

Figure 22. Basic Connections

SUPPLY VOLTAGE

The REF50xx family of voltage references features extremely low dropout voltage. With the exception of the REF5020, which has a minimum supply requirement of 2.7V, these references can be operated with a supply of 200mV above the output voltage in an unloaded condition. For loaded conditions, a typical dropout voltage versus load plot is shown in Figure 6 of the Typical Characteristics.

OUTPUT ADJUSTMENT (TRIM Pin)

The REF50xx provides a very accurate voltage output. However, V_{OUT} can be adjusted from the nominal value for the purpose of trimming system errors by configuring the TRIM pin (pin 5). The TRIM pin provides for adjustment of the voltage at V_{OUT} over a ±15mV range. Figure 23 shows a typical circuit using the TRIM pin to adjust V_{OUT}. When using this technique, the temperature coefficients of the resistors can degrade the temperature drift at the output.

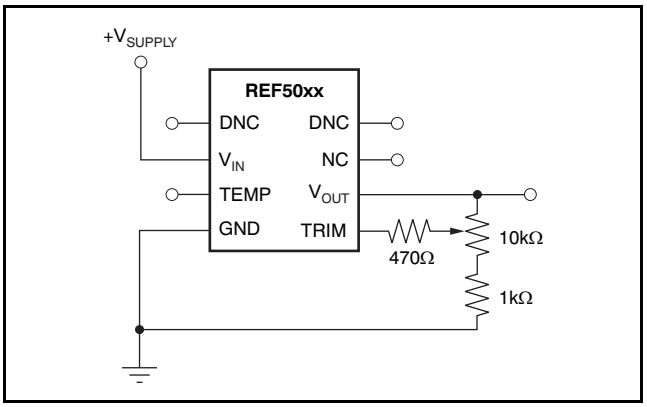

Figure 23. V_{OUT} Adjustment Using the TRIM Pin

TEMPERATURE DRIFT

The REF50xx is designed for minimal drift error, which is defined as the change in output voltage over temperature. The drift is calculated using the box method, as described by the following equation:

$$\text{Drift} = \left(\frac{V_{OUTMAX} - V_{OUTMIN}}{V_{OUT} \times \text{Temp Range}}\right) \times 10^6 (\text{ppm}) \quad (1)$$

The REF50xx features a maximum drift coefficient of 3ppm/°C for the high-grade version, and 8ppm/°C for the standard-grade.

Copyright © 2007, Texas Instruments Incorporated

TEMPERATURE MONITORING

The temperature output terminal (TEMP, pin 3) provides a temperature-dependent voltage output with approximately 60kΩ source impedance. As seen in Figure 8, the output voltage follows the nominal relationship:

$V_{TEMP\ PIN} = 509mV + 2.64 \times T(°C)$

This pin indicates general chip temperature, accurate to approximately ±15°C. Although it is not generally suitable for accurate temperature measurements, it can be used to indicate temperature changes or for temperature compensation of analog circuitry. A temperature change of 30°C corresponds to an approximate 79mV change in voltage at the TEMP pin.

The TEMP pin has high output impedance (see Figure 21). Loading this pin with a low-impedance circuit induces a measurement error; however, it does not have any effect on V_{OUT} accuracy. To avoid errors caused by low-impedance loading, buffer the TEMP pin output with a suitable low-temperature drift op amp, such as the OPA333, OPA335, or OPA376, as shown in Figure 24.

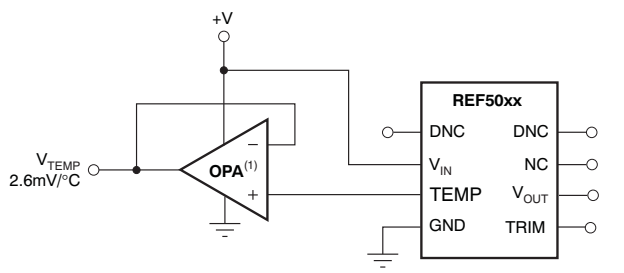

NOTE: (1) Low drift op amp, such as the OPA333, OPA335, or OPA376.

Figure 24. Buffering the TEMP Pin Output

POWER DISSIPATION

The REF50xx family is specified to deliver current loads of ±10mA over the specified input voltage range. The temperature of the device increases according to the equation:

$T_J = T_A + P_D \times \theta_{JA}$

Where:

T_J = Junction temperature (°C)

T_A = Ambient temperature (°C)

P_D = Power dissipated (W)

θ_{JA} = Junction-to-ambient thermal resistance (°C/W)

The REF50xx junction temperature must not exceed the absolute maximum rating of +150°C.

NOISE PERFORMANCE

Typical 0.1Hz to 10Hz voltage noise for each member of the REF50xx family is specified in the *Electrical Characteristics: Per Device* table. The noise voltage increases with output voltage and operating temperature. Additional filtering can be used to improve output noise levels, although care should be taken to ensure the output impedance does not degrade performance.

Copyright © 2007, Texas Instruments Incorporated

APPLICATION CIRCUITS

NEGATIVE REFERENCE VOLTAGE

For applications requiring a negative and positive reference voltage, the REF50xx and OPA735 can be used to provide a dual-supply reference from a 5V supply. Figure 25 shows the REF5025 used to provide a 2.5V supply reference voltage. The low drift performance of the REF50xx complements the low offset voltage and zero drift of the OPA735 to provide an accurate solution for split-supply applications. Care must be taken to match the temperature coefficients of R_1 and R_2.

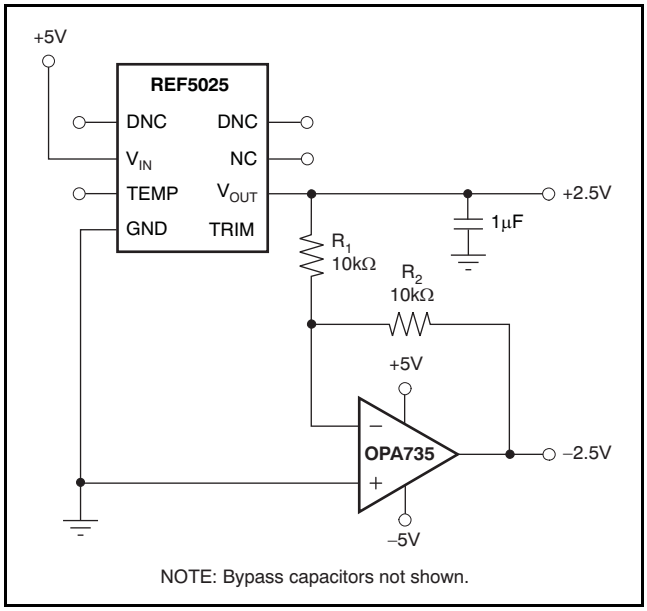

Figure 25. The REF5025 and OPA735 Create Positive and Negative Reference Voltages

DATA ACQUISITION

Data acquisition systems often require stable voltage references to maintain accuracy. The REF50xx family features low noise, very low drift, and high initial accuracy for high-performance data converters. Figure 26 shows the REF5040 in a basic data acquisition system.

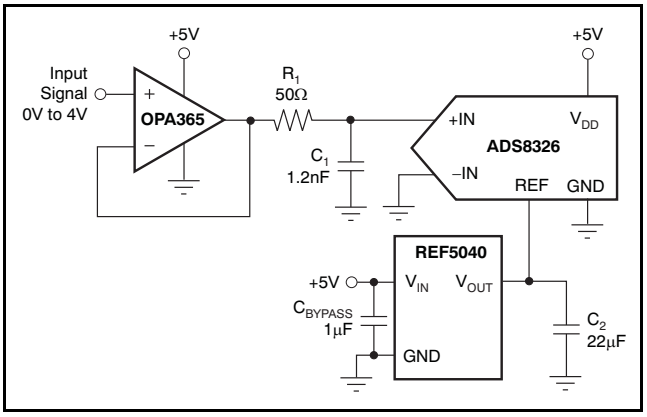

Figure 26. Basic Data Acquisition System

Copyright © 2007, Texas Instruments Incorporated

PACKAGING INFORMATION

Orderable Device	Status (1)	Package Type	Package Drawing	Pins	Package Qty	Eco Plan (2)	Lead/Ball Finish	MSL Peak Temp (3)
REF5020AID	ACTIVE	SOIC	D	8	75	Green (RoHS & no Sb/Br)	CU NIPDAU	Level-2-260C-1 YEAR
REF5020AIDG4	ACTIVE	SOIC	D	8	75	Green (RoHS & no Sb/Br)	CU NIPDAU	Level-2-260C-1 YEAR
REF5020AIDR	ACTIVE	SOIC	D	8	2500	Green (RoHS & no Sb/Br)	CU NIPDAU	Level-2-260C-1 YEAR
REF5020AIDRG4	ACTIVE	SOIC	D	8	2500	Green (RoHS & no Sb/Br)	CU NIPDAU	Level-2-260C-1 YEAR
REF5020ID	ACTIVE	SOIC	D	8	75	Green (RoHS & no Sb/Br)	CU NIPDAU	Level-2-260C-1 YEAR
REF5020IDG4	ACTIVE	SOIC	D	8	75	Green (RoHS & no Sb/Br)	CU NIPDAU	Level-2-260C-1 YEAR
REF5020IDR	ACTIVE	SOIC	D	8	2500	Green (RoHS & no Sb/Br)	CU NIPDAU	Level-2-260C-1 YEAR
REF5020IDRG4	ACTIVE	SOIC	D	8	2500	Green (RoHS & no Sb/Br)	CU NIPDAU	Level-2-260C-1 YEAR
REF5025AID	ACTIVE	SOIC	D	8	75	Green (RoHS & no Sb/Br)	CU NIPDAU	Level-2-260C-1 YEAR
REF5025AIDG4	ACTIVE	SOIC	D	8	75	Green (RoHS & no Sb/Br)	CU NIPDAU	Level-2-260C-1 YEAR
REF5025AIDR	ACTIVE	SOIC	D	8	2500	Green (RoHS & no Sb/Br)	CU NIPDAU	Level-2-260C-1 YEAR
REF5025AIDRG4	ACTIVE	SOIC	D	8	2500	Green (RoHS & no Sb/Br)	CU NIPDAU	Level-2-260C-1 YEAR
REF5025ID	ACTIVE	SOIC	D	8	75	Green (RoHS & no Sb/Br)	CU NIPDAU	Level-2-260C-1 YEAR
REF5025IDG4	ACTIVE	SOIC	D	8	75	Green (RoHS & no Sb/Br)	CU NIPDAU	Level-2-260C-1 YEAR
REF5025IDR	ACTIVE	SOIC	D	8	2500	Green (RoHS & no Sb/Br)	CU NIPDAU	Level-2-260C-1 YEAR
REF5025IDRG4	ACTIVE	SOIC	D	8	2500	Green (RoHS & no Sb/Br)	CU NIPDAU	Level-2-260C-1 YEAR
REF5030AID	ACTIVE	SOIC	D	8	75	Green (RoHS & no Sb/Br)	CU NIPDAU	Level-2-260C-1 YEAR
REF5030AIDG4	ACTIVE	SOIC	D	8	75	Green (RoHS & no Sb/Br)	CU NIPDAU	Level-2-260C-1 YEAR
REF5030AIDR	ACTIVE	SOIC	D	8	2500	Green (RoHS & no Sb/Br)	CU NIPDAU	Level-2-260C-1 YEAR
REF5030AIDRG4	ACTIVE	SOIC	D	8	2500	Green (RoHS & no Sb/Br)	CU NIPDAU	Level-2-260C-1 YEAR
REF5030ID	ACTIVE	SOIC	D	8	75	Green (RoHS & no Sb/Br)	CU NIPDAU	Level-2-260C-1 YEAR
REF5030IDG4	ACTIVE	SOIC	D	8	75	Green (RoHS & no Sb/Br)	CU NIPDAU	Level-2-260C-1 YEAR
REF5030IDR	ACTIVE	SOIC	D	8	2500	Green (RoHS & no Sb/Br)	CU NIPDAU	Level-2-260C-1 YEAR
REF5030IDRG4	ACTIVE	SOIC	D	8	2500	Green (RoHS & no Sb/Br)	CU NIPDAU	Level-2-260C-1 YEAR
REF5040AID	ACTIVE	SOIC	D	8	75	Green (RoHS & no Sb/Br)	CU NIPDAU	Level-2-260C-1 YEAR

Orderable Device	Status [1]	Package Type	Package Drawing	Pins	Package Qty	Eco Plan [2]	Lead/Ball Finish	MSL Peak Temp [3]
REF5040AIDG4	ACTIVE	SOIC	D	8	75	Green (RoHS & no Sb/Br)	CU NIPDAU	Level-2-260C-1 YEAR
REF5040AIDR	ACTIVE	SOIC	D	8	2500	Green (RoHS & no Sb/Br)	CU NIPDAU	Level-2-260C-1 YEAR
REF5040AIDRG4	ACTIVE	SOIC	D	8	2500	Green (RoHS & no Sb/Br)	CU NIPDAU	Level-2-260C-1 YEAR
REF5040ID	ACTIVE	SOIC	D	8	75	Green (RoHS & no Sb/Br)	CU NIPDAU	Level-2-260C-1 YEAR
REF5040IDG4	ACTIVE	SOIC	D	8	75	Green (RoHS & no Sb/Br)	CU NIPDAU	Level-2-260C-1 YEAR
REF5040IDR	ACTIVE	SOIC	D	8	2500	Green (RoHS & no Sb/Br)	CU NIPDAU	Level-2-260C-1 YEAR
REF5040IDRG4	ACTIVE	SOIC	D	8	2500	Green (RoHS & no Sb/Br)	CU NIPDAU	Level-2-260C-1 YEAR
REF5045AID	ACTIVE	SOIC	D	8	75	Green (RoHS & no Sb/Br)	CU NIPDAU	Level-2-260C-1 YEAR
REF5045AIDG4	ACTIVE	SOIC	D	8	75	Green (RoHS & no Sb/Br)	CU NIPDAU	Level-2-260C-1 YEAR
REF5045AIDR	ACTIVE	SOIC	D	8	2500	Green (RoHS & no Sb/Br)	CU NIPDAU	Level-2-260C-1 YEAR
REF5045AIDRG4	ACTIVE	SOIC	D	8	2500	Green (RoHS & no Sb/Br)	CU NIPDAU	Level-2-260C-1 YEAR
REF5045ID	ACTIVE	SOIC	D	8	75	Green (RoHS & no Sb/Br)	CU NIPDAU	Level-2-260C-1 YEAR
REF5045IDG4	ACTIVE	SOIC	D	8	75	Green (RoHS & no Sb/Br)	CU NIPDAU	Level-2-260C-1 YEAR
REF5045IDR	ACTIVE	SOIC	D	8	2500	Green (RoHS & no Sb/Br)	CU NIPDAU	Level-2-260C-1 YEAR
REF5045IDRG4	ACTIVE	SOIC	D	8	2500	Green (RoHS & no Sb/Br)	CU NIPDAU	Level-2-260C-1 YEAR
REF5050AID	ACTIVE	SOIC	D	8	75	Green (RoHS & no Sb/Br)	CU NIPDAU	Level-2-260C-1 YEAR
REF5050AIDG4	ACTIVE	SOIC	D	8	75	Green (RoHS & no Sb/Br)	CU NIPDAU	Level-2-260C-1 YEAR
REF5050AIDR	ACTIVE	SOIC	D	8	2500	Green (RoHS & no Sb/Br)	CU NIPDAU	Level-2-260C-1 YEAR
REF5050AIDRG4	ACTIVE	SOIC	D	8	2500	Green (RoHS & no Sb/Br)	CU NIPDAU	Level-2-260C-1 YEAR
REF5050ID	ACTIVE	SOIC	D	8	75	Green (RoHS & no Sb/Br)	CU NIPDAU	Level-2-260C-1 YEAR
REF5050IDG4	ACTIVE	SOIC	D	8	75	Green (RoHS & no Sb/Br)	CU NIPDAU	Level-2-260C-1 YEAR
REF5050IDR	ACTIVE	SOIC	D	8	2500	Green (RoHS & no Sb/Br)	CU NIPDAU	Level-2-260C-1 YEAR
REF5050IDRG4	ACTIVE	SOIC	D	8	2500	Green (RoHS & no Sb/Br)	CU NIPDAU	Level-2-260C-1 YEAR

[1] The marketing status values are defined as follows:
ACTIVE: Product device recommended for new designs.
LIFEBUY: TI has announced that the device will be discontinued, and a lifetime-buy period is in effect.
NRND: Not recommended for new designs. Device is in production to support existing customers, but TI does not recommend using this part in a new design.
PREVIEW: Device has been announced but is not in production. Samples may or may not be available.

OBSOLETE: TI has discontinued the production of the device.

(2) Eco Plan - The planned eco-friendly classification: Pb-Free (RoHS), Pb-Free (RoHS Exempt), or Green (RoHS & no Sb/Br) - please check http://www.ti.com/productcontent for the latest availability information and additional product content details.
TBD: The Pb-Free/Green conversion plan has not been defined.
Pb-Free (RoHS): TI's terms "Lead-Free" or "Pb-Free" mean semiconductor products that are compatible with the current RoHS requirements for all 6 substances, including the requirement that lead not exceed 0.1% by weight in homogeneous materials. Where designed to be soldered at high temperatures, TI Pb-Free products are suitable for use in specified lead-free processes.
Pb-Free (RoHS Exempt): This component has a RoHS exemption for either 1) lead-based flip-chip solder bumps used between the die and package, or 2) lead-based die adhesive used between the die and leadframe. The component is otherwise considered Pb-Free (RoHS compatible) as defined above.
Green (RoHS & no Sb/Br): TI defines "Green" to mean Pb-Free (RoHS compatible), and free of Bromine (Br) and Antimony (Sb) based flame retardants (Br or Sb do not exceed 0.1% by weight in homogeneous material)

(3) MSL, Peak Temp. -- The Moisture Sensitivity Level rating according to the JEDEC industry standard classifications, and peak solder temperature.

Important Information and Disclaimer: The information provided on this page represents TI's knowledge and belief as of the date that it is provided. TI bases its knowledge and belief on information provided by third parties, and makes no representation or warranty as to the accuracy of such information. Efforts are underway to better integrate information from third parties. TI has taken and continues to take reasonable steps to provide representative and accurate information but may not have conducted destructive testing or chemical analysis on incoming materials and chemicals. TI and TI suppliers consider certain information to be proprietary, and thus CAS numbers and other limited information may not be available for release.

In no event shall TI's liability arising out of such information exceed the total purchase price of the TI part(s) at issue in this document sold by TI to Customer on an annual basis.

D (R–PDSO–G8) PLASTIC SMALL–OUTLINE PACKAGE

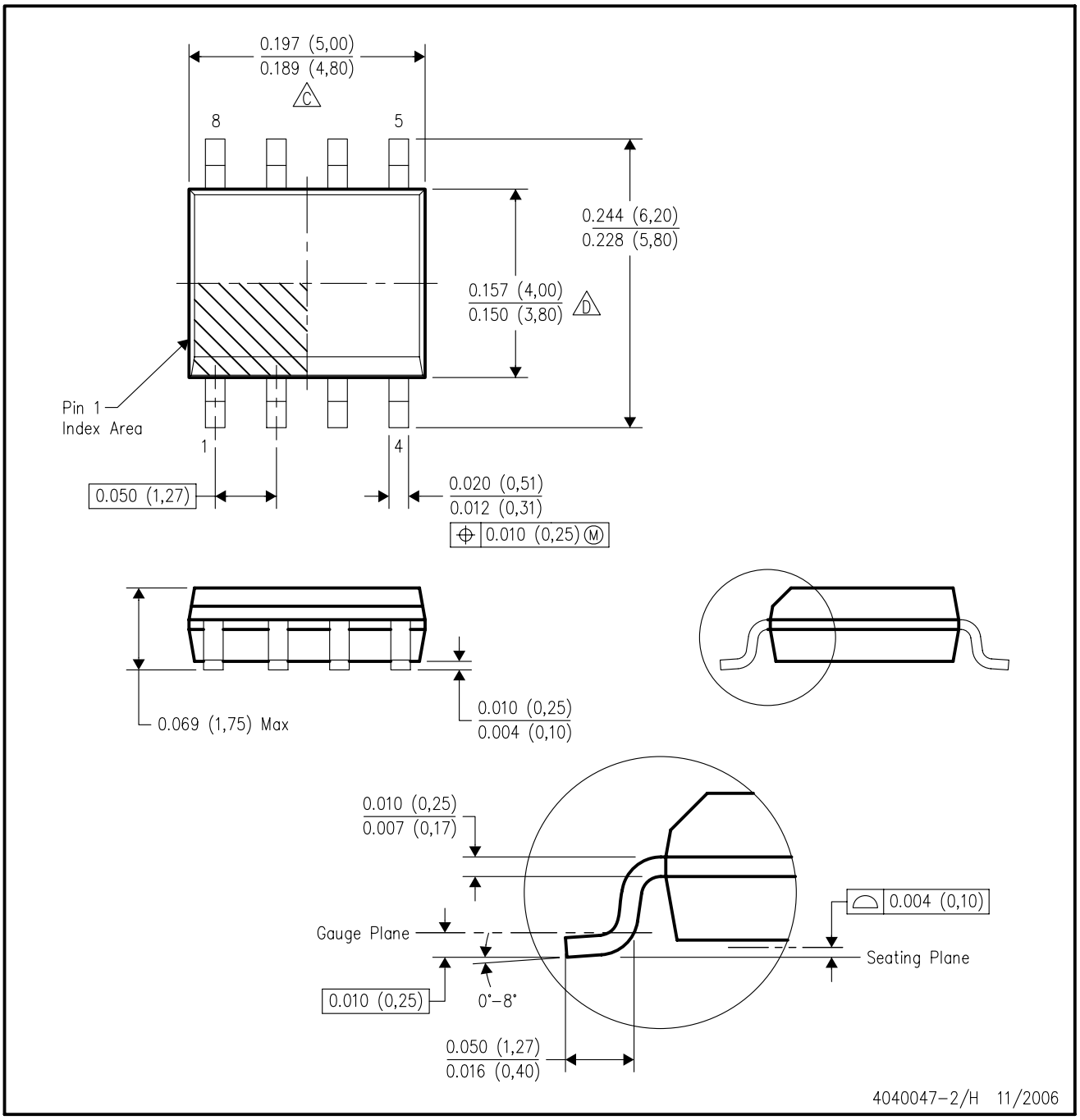

NOTES:
- A. All linear dimensions are in inches (millimeters).
- B. This drawing is subject to change without notice.
- C. Body length does not include mold flash, protrusions, or gate burrs. Mold flash, protrusions, or gate burrs shall not exceed .006 (0,15) per end.
- D. Body width does not include interlead flash. Interlead flash shall not exceed .017 (0,43) per side.
- E. Reference JEDEC MS–012 variation AA.

IMPORTANT NOTICE

Texas Instruments Incorporated and its subsidiaries (TI) reserve the right to make corrections, modifications, enhancements, improvements, and other changes to its products and services at any time and to discontinue any product or service without notice. Customers should obtain the latest relevant information before placing orders and should verify that such information is current and complete. All products are sold subject to TI's terms and conditions of sale supplied at the time of order acknowledgment.

TI warrants performance of its hardware products to the specifications applicable at the time of sale in accordance with TI's standard warranty. Testing and other quality control techniques are used to the extent TI deems necessary to support this warranty. Except where mandated by government requirements, testing of all parameters of each product is not necessarily performed.

TI assumes no liability for applications assistance or customer product design. Customers are responsible for their products and applications using TI components. To minimize the risks associated with customer products and applications, customers should provide adequate design and operating safeguards.

TI does not warrant or represent that any license, either express or implied, is granted under any TI patent right, copyright, mask work right, or other TI intellectual property right relating to any combination, machine, or process in which TI products or services are used. Information published by TI regarding third-party products or services does not constitute a license from TI to use such products or services or a warranty or endorsement thereof. Use of such information may require a license from a third party under the patents or other intellectual property of the third party, or a license from TI under the patents or other intellectual property of TI.

Reproduction of TI information in TI data books or data sheets is permissible only if reproduction is without alteration and is accompanied by all associated warranties, conditions, limitations, and notices. Reproduction of this information with alteration is an unfair and deceptive business practice. TI is not responsible or liable for such altered documentation. Information of third parties may be subject to additional restrictions.

Resale of TI products or services with statements different from or beyond the parameters stated by TI for that product or service voids all express and any implied warranties for the associated TI product or service and is an unfair and deceptive business practice. TI is not responsible or liable for any such statements.

TI products are not authorized for use in safety-critical applications (such as life support) where a failure of the TI product would reasonably be expected to cause severe personal injury or death, unless officers of the parties have executed an agreement specifically governing such use. Buyers represent that they have all necessary expertise in the safety and regulatory ramifications of their applications, and acknowledge and agree that they are solely responsible for all legal, regulatory and safety-related requirements concerning their products and any use of TI products in such safety-critical applications, notwithstanding any applications-related information or support that may be provided by TI. Further, Buyers must fully indemnify TI and its representatives against any damages arising out of the use of TI products in such safety-critical applications.

TI products are neither designed nor intended for use in military/aerospace applications or environments unless the TI products are specifically designated by TI as military-grade or "enhanced plastic." Only products designated by TI as military-grade meet military specifications. Buyers acknowledge and agree that any such use of TI products which TI has not designated as military-grade is solely at the Buyer's risk, and that they are solely responsible for compliance with all legal and regulatory requirements in connection with such use.

TI products are neither designed nor intended for use in automotive applications or environments unless the specific TI products are designated by TI as compliant with ISO/TS 16949 requirements. Buyers acknowledge and agree that, if they use any non-designated products in automotive applications, TI will not be responsible for any failure to meet such requirements.

Following are URLs where you can obtain information on other Texas Instruments products and application solutions:

Products		**Applications**	
Amplifiers	amplifier.ti.com	Audio	www.ti.com/audio
Data Converters	dataconverter.ti.com	Automotive	www.ti.com/automotive
DSP	dsp.ti.com	Broadband	www.ti.com/broadband
Interface	interface.ti.com	Digital Control	www.ti.com/digitalcontrol
Logic	logic.ti.com	Military	www.ti.com/military
Power Mgmt	power.ti.com	Optical Networking	www.ti.com/opticalnetwork
Microcontrollers	microcontroller.ti.com	Security	www.ti.com/security
RFID	www.ti-rfid.com	Telephony	www.ti.com/telephony
Low Power Wireless	www.ti.com/lpw	Video & Imaging	www.ti.com/video
		Wireless	www.ti.com/wireless

Mailing Address: Texas Instruments, Post Office Box 655303, Dallas, Texas 75265
Copyright © 2007, Texas Instruments Incorporated